ZPL RFID Commands

This section contains the ZPL II commands for RFID-specific applications.

For additional information, refer to the *RFID Programming Guide* for your printer. A copy is available on the User CD provided with your printer and online at http://www.zebra.com/manuals.

RFID Command Overview

In addition to reading or encoding RFID tags, the RFID ZPL commands also provide for RFID exception handling, such as setting the number of read/write retries before declaring a transponder defective (set with ^RR, ^RT, and ^WT) or setting the number of labels that will be attempted if an error occurs (set with ^RS).

For example, if an RFID label fails to program correctly or if the transponder cannot be detected, the printer ejects the label and prints VOID across it. The printer will try to print another label with the same data and format for the number of RFID labels specified by the ^RS command. If the problem persists, the printer follows the error handling instructions specified by the ^RS command: the printer may remove the problematic format from the print queue and proceed with the next format (if one exists in the buffer), or it may place the printer in Pause or Error mode.

If a parameter is designated as *not applicable* for a particular printer, any value entered for the parameter will be ignored, but the place holder for the field is required.

Printer and Firmware Compatibility

Before using a particular command, verify that it is compatible with your printer and firmware version. See the following tables:

- Table 18, *ZD500R Series Printer Command and Firmware Compatibility* on page 385
- Table 19, *RXi Series Printer Command and Firmware Compatibility* on page 386
- Table 20, *RZ Series and R110PAX4 Printer Command and Firmware Compatibility* on page 387
- Table 21, *R4Mplus, RP4T, and R2844-Z Printer Command and Firmware Compatibility* on page 388

Table 18 • ZD500R Series Printer Command and Firmware Compatibility

Command	Function	ZD500R Firmware all
^HL or ~HL on page 389	Return RFID Data Log to Host	*
^HR on page 390	Calibrate RFID Tag Position	*
^HV on page 239	Host Verification	*
^RA on page 396	Read AFI or DSFID Byte	—
^RB on page 398	Define EPC Data Structure	*
^RE on page 400	Enable/Disable E.A.S. Bit	—
^RF on page 401	Read or Write RFID Format	*
^RI on page 405	Get RFID Tag ID	—
^RL on page 406	Lock/Unlock RFID Tag Memory	*
^RM on page 409	Enable RFID Motion	—
^RN on page 410	Detect Multiple RFID Tags in Encoding Field	—
~RO on page 336	Reset Advanced Counters	*
^RQ on page 411	Quick Write EPC Data and Passwords	—
^RR on page 413	Specify RFID Retries for a Block	—
^RS on page 415	Set Up RFID Parameters	*
^RT on page 422	Read RFID Tag	—
^RU on page 424	Read Unique RFID Chip Serialization	*
~RV on page 426	Report RFID Encoding Results	—
^RW on page 427	Set RF Power Levels for Read and Write	*
^RZ on page 430	Set RFID Tag Password and Lock Tag	—
^WF on page 432	Encode AFI or DSFID Byte	—
^WT on page 434	Write (Encode) Tag	—
^WV on page 436	Verify RFID Encoding Operation	—

* = Supported
— = Not supported
a. Use the ^RF, ^RM, and ^RR commands rather than the ^RT command.
b. Use the ^RF, ^RM, ^RR, and ^WV commands rather than the ^WT command.

Table 19 • RXi Series Printer Command and Firmware Compatibility

Command	Function	R110Xi4	R110*Xi* HF	R110*Xi* and R170*Xi*
		Firmware		
		all	all	all
^HL or ~HL on page 389	Return RFID Data Log to Host	*	*	*
^HR on page 390	Calibrate RFID Tag Position	*	*	*
^RA on page 396	Read AFI or DSFID Byte	—	*	—
^RB on page 398	Define EPC Data Structure	*	*	*
^RE on page 400	Enable/Disable E.A.S. Bit	—	*	—
^RF on page 401	Read or Write RFID Format	*	*	*
^RI on page 405	Get RFID Tag ID	*	*	* (R60.13.0.13ZD or later)
^RL on page 406	Lock/Unlock RFID Tag Memory	—	—	—
^RM on page 409	Enable RFID Motion	*	*	*
^RN on page 410	Detect Multiple RFID Tags in Encoding Field	*	*	* (R60.13.0.3 or later)
~RO on page 336	Reset Advanced Counters	*	*	*
^RQ on page 411	Quick Write EPC Data and Passwords	*	—	* (R60.15.7Z or later)
^RR on page 413	Specify RFID Retries for a Block	*	*	*
^RS on page 415	Set Up RFID Parameters	*	*	*
^RT on page 422	Read RFID Tag	—	* a	* a
^RU on page 424	Read Unique RFID Chip Serialization	—	—	—
~RV on page 426	Report RFID Encoding Results	*	—	*
^RW on page 427	Set RF Power Levels for Read and Write	*	*	*
^RZ on page 430	Set RFID Tag Password and Lock Tag	*	—	*
^WF on page 432	Encode AFI or DSFID Byte	—	*	—
^WT on page 434	Write (Encode) Tag	—	* b	* b
^WV on page 436	Verify RFID Encoding Operation	—	—	*

* = Supported
— = Not supported
a. Use the ^RF, ^RM, and ^RR commands rather than the ^RT command.
b. Use the ^RF, ^RM, ^RR, and ^WV commands rather than the ^WT command.

Table 20 • RZ Series and R110*PAX*4 Printer Command and Firmware Compatibility

Command	Function	RZ400 and RZ600		R110*PAX*4	
		Firmware			
		V53.17.7Z or later	R53.16.*X*	R62.*X*.*X*	R63.*X*.*X*
^HL or ~HL on page 389	Return RFID Data Log to Host	*	*	*	*
^HR on page 390	Calibrate RFID Tag Position	*	*	*	*
^RA on page 396	Read AFI or DSFID Byte	—	—	—	—
^RB on page 398	Define EPC Data Structure	*	*	*	*
^RE on page 400	Enable/Disable E.A.S. Bit	—	—	—	—
^RF on page 401	Read or Write RFID Format	*	*	*	*
^RI on page 405	Get RFID Tag ID	*	*	* (R62.13.0.13ZC or later)	* (R63.13.0.11Z or later)
^RL on page 406	Lock/Unlock RFID Tag Memory	—	—	—	—
^RM on page 409	Enable RFID Motion	*	*	*	*
^RN on page 410	Detect Multiple RFID Tags in Encoding Field	*	*	*	—
~RO on page 336	Reset Advanced Counters	*	*	*	*
^RQ on page 411	Quick Write EPC Data and Passwords	*	*	* (R62.15.7Z or later)	—
^RR on page 413	Specify RFID Retries for a Block	*	*	*	*
^RS on page 415	Set Up RFID Parameters	*	*	*	*
^RT on page 422	Read RFID Tag	* a	* a	* a	* a
^RU on page 424	Read Unique RFID Chip Serialization	—	—	—	—
~RV on page 426	Report RFID Encoding Results	*	*	*	*
^RW on page 427	Set RF Power Levels for Read and Write	*	*	*	*
^RZ on page 430	Set RFID Tag Password and Lock Tag	*	*	*	*
^WF on page 432	Encode AFI or DSFID Byte	—	—	—	—
^WT on page 434	Write (Encode) Tag	* b	* b	* b	* b
^WV on page 436	Verify RFID Encoding Operation	*	*	*	*

* = Supported
— = Not supported
a. Use the ^RF, ^RM, and ^RR commands rather than the ^RT command.
b. Use the ^RF, ^RM, ^RR, and ^WV commands rather than the ^WT command.
c. For parameter e, the only accepted value is N for No Action.

Table 21 • R4Mplus, RP4T, and R2844-Z Printer Command and Firmware Compatibility

Command	Function	R4Mplus					RP4T	R2844-Z
		Firmware						
		SP994X	SP999X	SP1027X	SP1056X	SP1082X	all	all
^HL or ~HL on page 389	Return RFID Data Log to Host	*	*	*	*	*	*	—
^HR on page 390	Calibrate RFID Tag Position	*	*	*	*	*	*	—
^RA on page 396	Read AFI or DSFID Byte	—	—	—	—	—	—	—
^RB on page 398	Define EPC Data Structure	*	*	*	*	*	*	—
^RE on page 400	Enable/Disable E.A.S. Bit	—	—	—	—	—	—	*
^RF on page 401	Read or Write RFID Format	*	*	*	*	*	*	—
^RI on page 405	Get RFID Tag ID	*	*	*	*	*	*	*
^RL on page 406	Lock/Unlock RFID Tag Memory							
^RM on page 409	Enable RFID Motion	*	*	*	*	*	*	—
^RN on page 410	Detect Multiple RFID Tags in Encoding Field	—	—	—	—	—	*	—
~RO on page 336	Reset Advanced Counters	*	*	*	*	*	*	—
^RQ on page 411	Quick Write EPC Data and Passwords	—	—	—	—	—	*	—
^RR on page 413	Specify RFID Retries for a Block	*	*	*	*	*	*	—
^RS on page 415	Set Up RFID Parameters	*	*	*	*	*	* c	*
^RT on page 422	Read RFID Tag	* a	* a	* a	* a	* a	* a	*
^RU on page 424	Read Unique RFID Chip Serialization	—	—	—	—	—	—	—
~RV on page 426	Report RFID Encoding Results	* (SP994J or later)	* (SP999C or later)	*	*	*	*	—
^RW on page 427	Set RF Power Levels for Read and Write	*	*	*	*	*	*	—
^RZ on page 430	Set RFID Tag Password and Lock Tag	*	*	*	*	*	*	—
^WF on page 432	Encode AFI or DSFID Byte	—	—	—	—	—	—	—
^WT on page 434	Write (Encode) Tag	* b	* b	* b	* b	* b	* b	*
^WV on page 436	Verify RFID Encoding Operation	*	*	*	*	*	*	—

* = Supported
— = Not supported
a. Use the ^RF, ^RM, and ^RR commands rather than the ^RT command.
b. Use the ^RF, ^RM, ^RR, and ^WV commands rather than the ^WT command.
c. For parameter e, the only accepted value is N for No Action.

^HL or ~HL – Return RFID Data Log to Host

Description The printer continually logs RFID data and stores it in the printer's RAM. This command requests that the RFID data log be returned to the host computer, to clear the current data log, and to restart data recording. The ~HL command is processed immediately, while the ^HL command is processed after all of the previous formats (^XA ... ^XZ) have been processed.

Format ^HL or ~HL

In the log, RFID data displays in this format:

```
[RFID operation],[code or setting],[data]
```

where

[RFID operation]

R = read
W = write
L = lock
S = RFID settings
E = log file reset

[code or setting]

or ######## = an RFID error code (See the *RFID Programming Guide* for your printer for more information on error codes. A copy of the manual is located on the User CD that came with your printer, or you can download a copy from http://www.zebra.com/manuals.)

RPWR = read power

WPWR = write power

ANT = antenna

PPOS = program position

FFFFFFFF (or limited to length FFFF for some printers) = indicates that the log file was reset

[data]

the data read or written

Comments

- Data is shown in the format specified by the ^RFW command (ASCII, Hex, or EPC).
- If the log exceeds 64K (approximately 2000 operations), the data log is cleared automatically, and data recording restarts. When this happens, the following appears in the log:

  ```
  E,FFFFFFFF,Logfile automatically reset
  ```

- If the printer loses power, the log is lost. If the log results are important to you, retrieve the information frequently.

^HR – Calibrate RFID Tag Position

Description Use this command to initiate tag calibration for RFID media. During the process, the printer moves the media, reads the tag's TID to determine chip type, calibrates the RFID tag position, and determines the optimal settings for the RFID media being used. Depending on the printer, these settings include the programming position, the antenna element to use, and the read/write power level to use.

Important • Consider the following before using this command:

- This command is not supported by all printers or firmware. See *Printer and Firmware Compatibility* on page 384 for the list of printers and firmware with which you can use this command.
- For the R110Xi4 and ZD500R printers, leave all transponders before and after the tag that is being calibrated. This allows the printer to determine RFID settings which do not encode the adjacent tag. Allow a portion of media to extend out the front of the printer to allow for backfeed during the tag calibration procedure.
- With some printers, you should not perform transponder calibration for RFID media that meets the transponder placement specifications for your printer because doing so will slow the printer's throughput unnecessarily. For more information about tag calibration, refer to the *RFID Programming Guide* for your printer. A copy of the manual is located on the User CD that came with your printer, or you can download a copy from http://www.zebra.com/manuals.

Results of the `^HR` tag calibration are returned to the host computer. The `"run"` option in the `rfid.tag.calibrate` SGD command performs the same calibration but does not create a results table.

To restore the printer's default programming position at any time, use the `"restore"` option in the `rfid.tag.calibrate` SGD command (see *rfid.tag.calibrate* on page 833).

Format `^HRa,b,c,d,e`

Parameters	Details
`a` = start string	This parameter specifies the user text to appear before the results table. *Accepted values:* any string less than 65 characters *Default value:* `start`
`b` = end string	This parameter specifies the user text to appear after the results table. *Accepted values:* any string less than 65 characters *Default value:* `end`

Parameters	Details
c = start position	This parameter specifies the start position of the calibration range. All numeric values are in millimeters. Forward or backward designations assume that the label's initial position is with the leading edge at the print line. *Accepted Values:* **Forward:** F0 to Fxxx (where xxx is the label length in millimeters or 999, whichever is less) The printer feeds the label forward for the specified distance and then begins transponder calibration. **Backward:** B0 to B30 (Not valid on the RP4T printer.) The printer backfeeds the label for the specified distance and then begins transponder calibration. Allow at least 1.25 in. (32 mm) of empty media liner to extend out of the front of the printer. *Default value:* **For the R110Xi4 and ZD500R:** B20 —The printer backfeeds 20 mm before starting transponder calibration. **For all other supported printers:** F0—The printer moves the media to the start position relative to the leading edge of the label and then performs the RFID tag calibration.
d = end position	This parameter specifies the end position of the calibration range (last program position to check). All numeric values are in millimeters. Forward or backward designations assume that the label's initial position is with the leading edge at the print line. *Accepted Values:* **Forward:** F0 to Fxxx (where xxx is the label length in millimeters or 999, whichever is less) The printer performs transponder calibration until it reaches the specified end position and then ends the process. **Backward:** B0 to B30 (Not valid on the RP4T printer.) The printer performs transponder calibration until it reaches the specified end position and then ends the process. Valid only with a backward start position that is greater than the end position. A = Automatic (Valid only on the R110Xi4 and ZD500R printers.) The printer automatically ends the transponder calibration process after successfully reading and encoding a consecutive range of 5 mm on the label. The ZD500R also ensures that no other tags can be programmed at the programming positiion with the calibration-determined power levels. *Default value:* **For the R110Xi4 and ZD500R:** A **For all other supported printers:** Label length as shown on the printer configuration label

Parameters	Details
e = antenna and read/write power level detection	**Note •** This parameter is valid only on the R110Xi4 printer. This parameter selects the option to select the antenna and read/write power level automatically. *Accepted Values:* A = Automatic. The printer automatically scans through the antennas and read/write power during calibration. M = Manual. The printer uses the current antenna and read/write power level settings. *Default value:* A

Example 1 • When the printer is using Absolute mode and the following command is sent to the printer:

```
^XA^HR^XZ
```

the printer starts the transponder calibration and returns a results table such as the following:

```
start
position=195
215, ,
214, ,
213, ,
212, ,
211, ,
210, ,W
209,R,
208, ,
207, ,
206, ,W
205,R,
204, ,
203, ,
202, ,W
201,R,W
200,R,W
199,R,W
198,R,W
197,R,W
196,R,W
195,R,W <---****
194,R,W
193,R,W
192,R,W
191,R,W
190,R,W
189,R,
188, ,
187, ,
186, ,
185, ,
.
.
.
end
```

Each line in the results table appears as:

Row, Read Result, Write Result

where

Row = the dot row where calibration occurred

Read Result = results of calibration (R = read, “ ” = unable to read)

Write Result = results of calibration (W = write, “ ” = unable to write)

The optimal programming position is 195. This is identified at the top of the table (`position=195`) and with an the arrow (`<---****`) in the table.

Example 2 • When the printer is using Relative mode and the following command is sent to the printer:

```
^HRstart,end,B20,F42,M
```

the printer starts the tag calibration and returns a results table such as the following:

```
start
position=F0 MM
leading edge
B20, ,
B19, ,
B18, ,
B17, ,
…
B8, ,
B7, ,
B6, ,
B5, ,
B4,R,W
B3,R,W
B2,R,W
B1,R,W
F0,R,W<---**** F0 MM
F1,R,W
F2,R,W
F3,R,W
F4, ,
F5, ,
F6, ,
F7, ,
F8, ,
F9, ,
F10, ,
…
F38, ,
F39, ,
F40, ,
F41, ,
F42, ,
trailing edge
end
```

Each line in the results table appears as:

Row, Read Result, Write Result

where

Row = the position from the leading edge of the label where calibration occurred

Read Result = results of calibration (R = read, “ ” = unable to read)

Write Result = results of calibration (W = write, “ ” = unable to write)

The optimal programming position is F0 (program with the leading edge of the label at the print line). This is identified at the top of the table (`position=F0 MM`) and with an the arrow (`<---****`) in the table.

Example 3 • When the ^HR command is sent to the printer, the printer peforms tag calibration and returns a results table such as the following:

```
start
position=B2 MM,A1,20,24
tid information=E280.1130:Impinj
leading edge
B20,A1,18,22,A1,  ,  ,A1,  ,  ,A1,  ,  ,
B19,A1,23,25,A1,17,20,A1,  ,  ,A1,  ,  ,
B18,A1,25,28,A1,08,11,A1,  ,  ,A1,  ,  ,
B17,A1,28,30,A1,03,05,A1,  ,  ,A1,  ,  ,
B16,A1,28,30,A1,02,03,A1,  ,  ,A1,  ,  ,
B15,A1,  ,  ,A1,02,04,A1,  ,  ,A1,  ,  ,
B14,A1,  ,  ,A1,06,07,A1,  ,  ,A1,  ,  ,
B13,A1,  ,  ,A1,16,17,A1,  ,  ,A1,  ,  ,
B12,A1,  ,  ,A1,08,09,A1,  ,  ,A1,  ,  ,
B11,A1,  ,  ,A1,02,02,A1,  ,  ,A1,  ,  ,
B10,A1,  ,  ,A1,01,01,A1,  ,  ,A1,  ,  ,
B09,A1,  ,  ,A1,01,02,A1,29,30,A1,  ,  ,
B08,A1,  ,  ,A1,02,03,A1,28,30,A1,  ,  ,
B07,A1,  ,  ,A1,06,07,A1,29,  ,A1,  ,  ,
B06,A1,  ,  ,A1,14,16,A1,  ,  ,A1,  ,  ,
B05,A1,  ,  ,A1,06,09,A1,  ,  ,A1,  ,  ,
B04,A1,  ,  ,A1,04,06,A1,  ,  ,A1,  ,  ,
B03,A1,  ,  ,A1,07,10,A1,  ,  ,A1,  ,  ,
B02,A1,  ,  ,A1,12,15,A1,  ,  ,A1,  ,  ,<---****
B01,A1,  ,  ,A1,15,19,A1,  ,  ,A1,  ,  ,
F00,A1,  ,  ,A1,18,22,A1,  ,  ,A1,  ,  ,
F01,A1,  ,  ,A1,23,25,A1,18,21,A1,  ,  ,
F02,A1,  ,  ,A1,25,28,A1,08,10,A1,  ,  ,
trailing edge
end
```

Each line in the results table gives a row number followed by readings associated with RIFD tags that are visible at that row. Multiple values on a line indicate that multiple tags were visible. The order of the RFID tags is arbitrary.

```
[Row],[Antenna Element],[Min Read Power],[Min Write Power],
[Antenna Element],[Min Read Power],[Min Write Power] ...
```

where

- Row = the position from the leading edge of the label where calibration occurred
- Antenna Element = the antenna used (the ZD500R only has A1)
- Minimum Read Power = calibration results (0 – 30) for a tag visible from that row
- Minimum Write Power = calibration results (0 – 30) for the same tag

The read and write power values are left empty (such as A1, , ,) when no tag is found.

In the sample results table above, at position B16 (16 mm behind the print line), two RFID tags are visible to the printer at antenna A1. One tag can be read at power level 28 and written to at power level 30. The other tag can be read at power level 2 and written to at power level 3. At position B15, only one tag is visible. At position B9, a third tag becomes visible and can be read at power level 29 and written to at power level 30.

The arrow (<---****) in the table indicates that a valid program position and power levels were found during calibration. The program position is identified at the top of the table as position=B2 MM (backfeed 2 millimeters). The optimal antenna element is A3. At that position, the optimal read power is 20, and the optimal write power is 24.

^RA – Read AFI or DSFID Byte

Important • This command is not supported by all printers or firmware. See *Printer and Firmware Compatibility* on page 384 for the list of printers and firmware with which you can use this command.

Description Use this command to read the AFI or DSFID byte. The data can be returned to the host via the `^HV` command.

Format `^RA#,f,r,m,b`

Parameters	Details
`#` = field number specified with another command	The value assigned to this parameter should be the same as the one used in the `^RT` command. *Accepted values:* 0 to 9999 *Default value:* 0
`f` = format	*Accepted values:* `0` = ASCII `1` = Hexadecimal *Default value:* 0
`r` = number of retries	*Accepted values:* 0 to 10 *Default value:* 0
`m` = motion	*Accepted values:* `0` = Feed label after writing. `1` = No Feed after writing. Other ZPL may cause a feed. *Default value:* 0
b = type of byte to read	*Accepted values:* `A` = AFI byte `D` = DSFID byte *Default value:* A

Example 1 • This example reads the AFI byte in ASCII format and returns `AFI Byte:x` to the host. The printer will retry the command five times if necessary. A voided label is generated if the read is unsuccessful after these retries. The data read will go into the `^FN1` location of the recalled format.

```
^XA
^FO20,120^A0N,60^FN1^FS
^RA1,0,5,0^FS
^HV1,,AFI Byte:^FS
^XZ
```

Example 2 • This example reads the DSFID byte in ASCII format and returns `DSFID Byte:x` to the host. The printer will retry the command three times if necessary. A voided label is generated if the read is unsuccessful after these retries. The data read will go into the `^FN1` location of the recalled format.

```
^XA
^FO20,120^A0N,60^FN1^FS
^RA1,0,3,0,D^FS
^HV1,,DSFID Byte:^FS
^XZ
```

^RB – Define EPC Data Structure

Important • This command is not supported by all printers or firmware. See *Printer and Firmware Compatibility* on page 384 for the list of printers and firmware with which you can use this command.

Description Use this command to define the structure of EPC data, which can be read from or written to an RFID tag. For more information about EPC specifications, refer to the EPC Global web site. All parameters in this command are persistent and will be used in subsequent formats if not provided. The values are initially set to the default values.

RFID tags can have different partitions defined. This command specifies the number of partitions and how many bits are in each partition.

Format `^RBn,p0,p1,p2, ..., p15`

Parameters	Details
`n` = total bit size of the partitions	Specify the number of bits to include in the partitions. *Accepted values:* 1 to *n*, where *n* is the bit size of the tag. *Default value:* `96`
`p0 ... p15` = partition sizes	Specify the number of bits to include in the individual partitions. The partition sizes must add up to the bit size specified for the previous parameter. The largest individual partition size is 64 bits. *Accepted values:* 1 to 64 *Default value:* `1`

Example 1 • The following command specifies that there are 96 bits used with three fields. Fields 1, 2, and 3 contain 10, 26, and 60 bits, respectively.

```
^RB96,10,26,60
```

The ZPL code to encode a tag with this format would look like this:

```
^RFW,E^FD1000.67108000.1122921504606846976^FS
```

When the tag is being encoded, the tag stores the data in the following way:

- Field 1 contains `1000`. This value is stored in the first 10 bits
- Field 2 contains `67108000`. This value is stored in the next 26 bits.
- Field 3 contains `1122921504606846976`. This value is stored in the remaining 60 bits.

Example 2 • The following command specifies that there are 64 bits used with eight 8-bit fields.

```
^RB64,8,8,8,8,8,8,8,8^FS
```

The ZPL code to encode a tag with this format would look like this:

```
^RFW,E^FD1.123.160.200.249.6.1.0^FS
```

When writing to the tag, each set of data is written in its respective 8-bit field.

Example 3 • This example uses the SGTIN-96 standard, which defines 96-bit structure in the following way:

	Header	Filter Value	Partition	Company Prefix Index	Item Reference	Serial Number
SGTIN-96	8 bits	3 bits	3 bits	20–40 bits	24 bits	38 bits
	10 (binary value)	8 (decimal capacity)	8 (decimal capacity)	16,383 (decimal capacity)	9 to 1,048,575 (decimal capacity*)	33,554,431 (decimal capacity)

* Capacity of Item Reference field varies with the length of the company prefix.

The ZPL code to encode a tag with this format would look like this:

```
^XA
^RB96,8,3,3,20,24,38^FS
^RFW,E^FD48,1,6,770289,10001025,1^FS
^XZ
```

These commands would put

- `48` in the header
- `1` as the filter value
- 6 as the partition (indicates a 20-bit prefix and 24-bit item reference)
- `770289` as the company prefix
- `10001025` as the item reference
- `1` as the serial number

To read this EPC data and print the results on the label, you would use the following code:

```
^XA
^RB96,8,3,3,20,24,38^FS
^FO50,50^A0N,40^FN0^FS
^FN0^RFR,E^FS
^XZ
```

The resulting label would look like this:

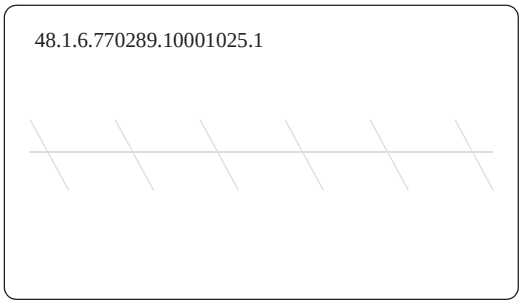

^RE – Enable/Disable E.A.S. Bit

Important • This command is not supported by all printers or firmware. See *Printer and Firmware Compatibility* on page 384 for the list of printers and firmware with which you can use this command.

Description Use this command to enable or disable the Electronic Article Surveillance (E.A.S.) bit that is available in some ISO15693 tags (such as Philips). This command works only on those ISO15693 transponders and will be ignored if the tag does not support E.A.S.

Format `^REt,r`

Parameters	Details
t = Enable/disable the E.A.S. bit in the ISO15693 transponder	*Accepted values:* `N` = Disable E.A.S. `Y` = Enable E.A.S. *Default value:* N
`r` = number of retries	*Accepted values:* 0 to 10 *Default value:* 0

Example • This example enables the E.A.S. bit in the transponder. It will retry the command five times if necessary.

```
^XA
^REy,5
^XZ
```

^RF – Read or Write RFID Format

Description Use this command to read or write to (encode) an RFID tag or to specify the access password.

When using this command to read a tag, you may use a field variable to print the tag data on the label or to return the data to the host. For more information on how memory is stored on a Gen 2 tag or for examples that use a field variable, refer to the *RFID Programming Guide* for your printer. A copy of the manual is located on the User CD that came with your printer, or you can download a copy from http://www.zebra.com/manuals.

Format `^RFo,f,b,n,m`

Parameters	Details
`o` = operation	Specifies the action to be performed. *Accepted Values:* `W` = write to (encode) the tag `L` = write with LOCK (if supported by tag type; Gen 2 tag type does not use this locking function) `R` = read the tag `P` = read password (Gen 2 tag type only. Not supported on all Gen 2 printers, including the ZD500R printer.) `S` = specify the access password *Default Value:* `W`
`f` = format	*Accepted Values:* `A` = ASCII `H` = Hexadecimal `E` = EPC (ensure proper setup with the `^RB` command) *Default Value:* `H`

<table>
<tr><th>Parameters</th><th>Details</th></tr>
<tr><td>

For Gen 2 tag type only:

b = password

OR

b = starting block number

For tag types other than Gen 2:

b = starting block number

</td><td>

For Gen 2 tag type only:

What you specify for this parameter depends on what you entered for the Operation parameter.

<table>
<tr><th>If the Operation parameter value is...</th><th>Then...</th></tr>
<tr><td>W</td><td>

Accepted Values:

- P, which indicates that an access password, a kill password, or both follow in a ^FD command. Each password must be 8 hex characters. If the password is omitted, it is not written. An access password is used in subsequent lock commands in the format.
- 0 to *n*, which specifies the 16-bit starting block number, where *n* is the maximum number of blocks for the bank specified in the memory bank parameter. When the memory bank parameter is set to E (EPC 96-bit) or A (EPC and Auto adjust PC bits), this number defaults to zero.

Default Value: 0

</td></tr>
<tr><td>L or R</td><td>

Accepted Values:

- 0 to *n*, to specify the 16-bit starting block number, where *n* is the maximum number of blocks for the bank specified in the memory bank parameter. When the memory bank parameter is set to E (EPC 96-bit) or A (EPC and Auto adjust PC bits), this number defaults to zero.

Default Value: 0

</td></tr>
<tr><td>P</td><td>

This parameter specifies which password to read. (Does not apply to the ZD500R printer.)

Accepted Values:

K = kill password

A = access password

Default Value: K

</td></tr>
<tr><td>S</td><td>This parameter must be P and must be followed by the access password in a ^FD command.</td></tr>
</table>

For tag types other than Gen 2:

Specifies the starting block number.

Accepted Values: 0 to *n*, where *n* is the maximum number of blocks for the tag.

Default Value: 0

</td></tr>
</table>

Parameters	Details
n = number of bytes to read or write	Specifies the number of bytes to read or write. **For high-frequency (HF) printers:** *Accepted Values:* 1 to *n*, where *n* is the maximum number of bytes for the tag. *Default Value:* 1 **For Gen 2 tag type only:** When E or A is specified for the memory bank parameter, this value is not required. *Accepted Values:* 1 to *n*, where *n* is the maximum number of bytes for the tag. *Default Value:* 1 **For all other printers and tag types:** This parameter applies only when the starting block number is 1. *Accepted Values:* 1 to *n*, where *n* is the maximum number of bytes for the tag. For UCODE EPC 1.19, *n* is 32. *Default Value:* 1
m = Gen 2 memory bank	**Note •** This parameter applies to Gen 2 tags only. Specifies the Gen 2 memory bank. For more information about Gen 2 memory, refer to the *RFID Programming Guide* for your printer. *Accepted Values:* E = EPC 96-bit (When writing data, this parameter performs the operation on Gen 2 bit address 20_h and accesses 12 bytes of the EPC memory bank. When reading data, this parameter reads the amount of data specified in the PC bits on the tag.) A = EPC and Auto adjust PC bits (When writing data, this parameter performs the operation on Gen 2 bit address 20_h of the EPC memory bank and accesses the number of bytes specified in the ^FD. The PC bits will be updated to match the amount of data written to the tag. When reading data, this parameter reads the amount of data specified in the PC bits on the tag.) 0 = Reserved 1 = EPC 2 = TID (Tag ID) 3 = User *Default Value:* E

Example 1 • This example encodes 96-bit data in ASCII format. (The ^RS command can be ommited for printers that use Gen 2 tag types only.)

```
^XA
^RS8
^RFW,A^FD00 my data^FS
^XZ
```

Example 2 • This example encodes 96-bit EPC data, as specified by the ^RB command.

```
^XA
^RB96,8,3,3,20,24,38
^RFW,E^FD16,3,5,78742,146165,1234567891^FS
^XZ
```

Example 3 • This example encodes 4 bytes of hexadecimal formatted data, starting in block 3 of Gen 2 EPC bank 1. (The ^RS command can be ommited for printers that use Gen 2 tag types only.)

```
^XA
^RS8
^RFW,H,3,4,1^FD11112222^FS
^XZ
```

Example 4 • This example reads the extended Gen 2 tag ID (TID), which is not read by the ^RI command, and returns the results to the host computer. The results are labeled with the header "8-byte Tag ID Data." (The ^RS command can be ommited for printers that use Gen 2 tag types only.)

```
^XA
^RS8
^RFR,H,0,8,2^FN1^FS^HV1,,8-byte Tag ID Data:^FS
^XZ
```

Example 5 • This command writes and specifies both the access password (12345678) and the kill password (88887777) separated by a comma.

```
^RFW,H,P^FD12345678,88887777^FS
```

This command writes the access password only:

```
^RFW,H,P^FD12345678^FS
```

This command writes the kill password only (a comma must be used before it to distinguish it from an access password):

```
^RFW,H,P^FD,88887777^FS
```

See the examples for *^RL* on page 406 for how this command would be used in a format.

Example 6 • This command writes 1122334455667788 to the bit address 20h of the EPC memory and updates the PC bits bit address 10h to 14h to reflect 8 bytes (4 words) of data.

```
^RFW,H,,,A^FD1122334455667788^FS
```

Example 7 • This command specifies the access password for the tag, which will be used in subsequent lock commands in the format. The access password specified must match the one stored on the tag. This command does not write the password to the tag. See the examples for *^RL* on page 406 for how this command would be used in a format.

```
^RFS,H,P^FD12345678^FS
```

^RI – Get RFID Tag ID

Important • This command is not supported by all printers or firmware. See *Printer and Firmware Compatibility* on page 384 for the list of printers and firmware with which you can use this command.

Description Use this command to get the unique serial number of the tag and return it in hexadecimal format. The data can be sent back to the host via the `^HV` command.

For Gen 2 tag types, this command returns the 32-bit tag ID (TID) for the tag. If your Gen 2 tag supports TID data beyond 32 bits, see *^RF* on page 401 to access the TID memory bank.

Format `^RIa,b,c,d`

Parameters	Details
`a` = number to be assigned to the field	*Accepted values:* 0 to 9999 *Default value:* 0
`b` = specify data order	**Note •** This parameter applies only to the R110*Xi* HF and R2844-Z printers. *Accepted Values:* `0` = Most significant byte first for Tag*It and PicoTag. Least significant byte first for I*code and ISO15693. `1` = Reverse the data order *Default value:* 0
`c` = number of retries	*Accepted values:* 0 to 10 *Default value:* 0
`d` = motion	*Accepted values:* `0` = Feed label after writing `1` = No Feed after writing (other ZPL commands may cause a feed) *Default value:* 0

Example • This example reads a tag ID, prints it on a label, and sends string `Tag ID:xxxxxxxx` to the host. The data read will go into the `^FN0` location of the format. The printer will retry the command five times, if necessary.

```
^XA
^FO20,120^A0N,60^FN0^FS
^RI0,,5^FS
^HV0,,Tag ID:^FS
^XZ
```

^RL – Lock/Unlock RFID Tag Memory

The ^RL command has two distinct formats and functions:

- ^RLM – Lock/Unlock the Specified Memory Bank
  Locks a password or an entire memory bank in a writeable or unwriteable state. These locks/unlocks can be permanent or reversible.
- ^RLB – Permanently Lock Specified Memory Sections
  Locks blocks of user memory in an unwriteable state.

^RLM – Lock/Unlock the Specified Memory Bank

Description The ^RLM command locks/unlocks the specified password or memory bank on an RFID tag. You can use this command to do the following:

- lock individual passwords, thereby preventing or allowing subsequent reads or writes of that password
- lock individual memory banks, thereby preventing or allowing subsequent writes to those banks
- Permanently lock (permalock) the lock status for a password or memory bank

Format ^RLM,k,a,e,u

Parameters	Details
k = kill password function	*Accepted Values:* U = unlock the kill password* L = lock the kill password* O = permanently unlock (Open) the kill password P = permanently lock (Protected) the kill password
a = access password function	*Accepted Values:* U = unlock the access password* L = lock the access password* O = permanently unlock (Open) the access password P = permanently lock (Protected) the access password
e = EPC memory bank function	*Accepted Values:* U = unlock the EPC memory bank* L = lock the EPC memory bank* O = permanently unlock (Open) the EPC memory bank P = permanently lock (Protected) the EPC memory bank

* The access password must be set to something other than the default of 00000000 to use this value. See Example 4 on page 408 for an example.

Parameters	Details
u = USER memory bank function	*Accepted Values:* U = unlock the USER memory bank* L = lock the USER password bank* O = permanently unlock (Open) the USER memory bank P = permanently lock (Protected) the USER memory bank

* The access password must be set to something other than the default of 00000000 to use this value. See Example 4 on page 408 for an example.

^RLB – Permanently Lock Specified Memory Sections

Description The ^RLB command permanently locks (permalocks) one or more sections (individual sub-portions) in a tag's user memory. The section sizes for each tag is defined by the tag manufacturer.

Format ^RLB,s,n

Parameters	Details
s = starting section	Specify the starting section of memory to lock.
n = number of sections	Specify the number of sections to lock.

Example 1 • The following command locks all memory banks using a previously specified access password.

```
^RLM,L,L,L,L^FS
```

Example 2 • The following command locks the user memory banks using a previously specified access password.

```
^RLM,,,,L^FS
```

Example 3 • The following command permalocks sections 0 to 4 of user memory using a previously specified access password.

```
^RLB,0,4^FS
```

Example 4 • This code does the following:

- writes 12 bytes to user memory
- writes “12345678” to the access password and “11223344” to the kill password
- permalocks 6 sections of user memory using “12345678” as the access password
- locks the kill and access passwords and permanently unlocks the EPC memory, using “12345678” as the access password

```
^XA
^RFW,H,0,12,3^FD112233445566778899001122^FS
^RFW,H,P^FD12345678,11223344^FS
^RLB,0,6^FS
^RLM,L,L,O^FS
^XZ
```

Example 5 • This code does the following:

- writes 12 bytes to user memory
- permalocks 6 sections of user memory using “00000000” as the access password
- permalocks the kill password and access password using “00000000” as the access password

```
^XA
^RFW,H,0,12,3^FD112233445566778899001122^FS
^RLB,0,6^FS
^RLM,P,P^FS
^XZ
```

^RM – Enable RFID Motion

Important • This command is not supported by all printers or firmware. See *Printer and Firmware Compatibility* on page 384 for the list of printers and firmware with which you can use this command.

Description Use this command to enable or disable RFID motion. By default, labels automatically print at the end of the format. This command allows you to inhibit the label from actually moving when it reaches the program position, which is useful for debugging, setup, and custom applications. This parameter is not persistent (carried over from label to label).

Format `^RMe`

Parameters	Details
`e` = enable	*Accepted values:* `Y` = Yes, move the label `N` = No, do not move the label *Default value:* Y

^RN – Detect Multiple RFID Tags in Encoding Field

Important • This command is not supported by all printers or firmware. See *Printer and Firmware Compatibility* on page 384 for the list of printers and firmware with which you can use this command.

Description Use this command to enable or disable detection of multiple RFID tags in the encoding field. By default, the printer checks for more than one tag in the field before attempting to read or write. If more than one tag is found, the label over the antenna support is voided, and the `RFID ERR STATUS` parameter on the control panel displays `MULTIPLE TAGS`. To speed up printing and encoding by up to 200 ms, the check may be disabled.

Note • This parameter is persistent across lables (carried over from label to label), but is NOT persistent across power cycles.

Format `^RNe`

Parameters	Details
`e` = enable	*Accepted Values:* `Y` = Yes, check for multiple tags `N` = No, do not check for multiple tags *Default Value:* `Y` = Printers with firmware R60.13.0.5 and earlier `N` = Printers with firmware R60.13.0.7 and later **Note •** If an invalid parameter value is entered, the default value will be used.

^RQ – Quick Write EPC Data and Passwords

Important • This command is not supported by all RFID tags, printers, or firmware. See *Printer and Firmware Compatibility* on page 384 for the list of printers and firmware with which you can use this command.

Description Use this command with an Alien Higgs RFID tag and appropriate firmware to write the EPC data, access password, and kill password with one command. Doing so reduces the encoding time.

Note • The access password on the tag to be written to must be 00000000 prior to sending this command.

Format `^RQf,c,o[data]`

Parameters	Details
`f` = format	*Accepted Values:* `A` = ASCII `H` = Hexadecimal `E` = EPC *Default Value:* `H`
`c` = chip type	*Accepted Values:* `0` (Higgs IC tag) *Default Value:* `0`
`o` = option	*Accepted Values:* `0` (write 96-bit EPC) *Default Value:* `0`
`data` = the EPC data, access password, and kill password	Use the `^FD` command to specify the passwords in the following format: `^FD[EPC],[access],[kill]` where: `EPC` = the EPC data in the format specified by the `f` parameter. The data should match what would be programmed with the ^RF command. `access` = an optional access password in hexadecimal format. If this field is left blank, 0x00000000 is written as the access password. `kill` = an optional kill password in hexadecimal format. If this field is left blank, 0x00000000 is written as the kill password.

Example 1 • This example writes the EPC data to the tag in hexadecimal format. The unspecified access and kill passwords are written as zeroes (0x00000000).

```
^XA^RQ^FD112233445566778899001122^XZ
```

Example 2 • This example writes the EPC data to the tag in hexadecimal format. The access password is written as 0xAAAAAAAA, and the kill password is written as 0xBBBBBBBB.

```
^XA^RQ^FD112233445566778899001122,AAAAAAAA,BBBBBBBB^XZ
```

Example 3 • This example writes the EPC data to the tag in EPC format. The unspecified access and kill passwords are written as zeroes (0x00000000).

```
^XA^RB96,30,30,30,6^RQE^FD1234.5678.9012.12^XZ
```

Example 4 • This example writes the EPC data to the tag in hexadecimal format. The access password is written as 0xAAAAAAAA, and the unspecified kill password is written as zeroes (0x00000000).

```
^XA^RB96,30,30,30,6^RQE^FD1234.5678.9012.12,AAAAAAAA^XZ
```

^RR – Specify RFID Retries for a Block

Important • This command is not supported by all printers or firmware. See *Printer and Firmware Compatibility* on page 384 for the list of printers and firmware with which you can use this command.

Description Use this command to change the number of times that the printer attempts to read or write to a particular block of a single RFID tag. This command is persistent and will be used in subsequent formats if not provided.

Note • This command's function is different than the "number of labels" parameter in the `^RS` command.

Format `^RRn,a`

Parameters	Details
`n` = number of retries	*Accepted Values:* `0` to `10` *Default Value:* `6`
`a` = adaptive antenna element selection	**Note •** This parameter is valid only on the R110Xi4 printer with a label that is 2 in. (51 mm) or longer. After the printer has exhausted the number of retries specified by parameter `n`, the printer may try other antenna elements. This parameter enables this ability. If the printer is unsuccessful communicating with the RFID tag after trying the neighboring antenna elements, the printer voids the label. **Note •** Activating this parameter may slow throughput on damaged or weak RFID tags. *Accepted Values:* `0` or `1` 0 = None. The printer uses only the current antenna element selection. 1 = Neighbors. The printer attempts to read the tag using the antenna elements to the left/right and above/below the current antenna element. The antenna element that is successful is used for all subsequent RFID commands until the next unsuccessful attempt, until the printhead is opened, or until the printer is power cycled. *Default Value:* `0`

Example 1 • This example sets the read block retries to 5.

```
^XA
^FN1^RR5^RFR,H^FS
^HV1^FS
^XZ
```

Example 2 • This example sets the write block retries to 2.

```
^XA
^RR2^RFW,H^FD1234^FS
^XZ
```

Example 3 • On an R110Xi4 printer, this example sets the write retries to 2 and allows the printer to try neighboring antennas in the event that the current antenna cannot write to the RFID tag.

```
^XA
^RR2,1^RFW,H^FD1234^FS
^XZ
```

^RS – Set Up RFID Parameters

Use this command to set up RFID parameters including tag type; programming position; and error handlingIn addition to reading or encoding RFID tags, the RFID ZPL commands also provide for RFID exception handling, such as setting the number of read/write retries before declaring a transponder defective (set with ^RR, ^RT, and ^WT) or setting the number of labels that will be attempted if an error occurs (set with ^RS).

For example, if an RFID label fails to program correctly or if the transponder cannot be detected, the printer ejects the label and prints VOID across it. The printer will try to print another label with the same data and format for the number of labels specified (parameter n). If the problem persists, the printer follows the error handling instructions specified by the error handling parameter (parameter e): the printer may remove the problematic format from the print queue and proceed with the next format (if one exists in the buffer), or it may place the printer in Pause or Error mode.

Use care when using this command in combination with ^RT or ^RF for reading tag data. Problems can occur if the data read from the tag is going to be printed on the label. Any data read from the tag must be positioned to be printed above the read/write position. Failure to do this will prevent read data from being printed on the label.

Format ^RSt,p,v,n,e,a,c,s

Parameters	Details
t = tag type	Tells the printer/print engine which tag type you are using. If you specify a tag type that is not supported by your printer or firmware, the printer uses its default value. For the supported tag types and defaults, see Table 22 on page 420. *Accepted Values:* **UHF Printers** 0 = None 1 = EPC Class 0 2 = EPC Class 0 Plus 3 = EPC Class 1 64-bit 4 = EPC Class 1 96-bit 5 = UCODE EPC 1.19 6 = Impinj Class 0 Plus 7 = ISO 18000-06A 8 = EPC Class 1, Generation 2 (Gen 2) 9 = ISO 18000-06B **HF Printers** **Note •** Only the R110*Xi* HF printer (firmware version R65.X.X) supports the use of letters for this parameter. All other printers use the numbers. A or 0 = None B or 1 = Auto detect (query tag to determine) C or 2 = Tag*It (Texas Instruments Tagit tags) D or 3 = I*code (Phillips Icode tags) E or 4 = Pico Tag (Inside Technology's) F or 5 = ISO 15693 G or 6 = EPC tag (13.56 MHz) H or 7 = UID Tag I or 8 = Mifare UltraLight *Default Value:* varies by printer (see Table 22 on page 420)

Parameters	Details
p = read/write position of the tag (programming position)	This parameter sets the read/write position of the tag. **Important •** If a label format specifies a value for the programming position, this value will be used for the programming position for all labels until a new position is specified or until the tag calibration procedure is run. *Accepted Values:* **For the ZD500R only:** F0 to Fxxx (where xxx is the label length in millimeters or 999, whichever is less) The printer prints the first part of a label until it reaches the specified distance and then begins programming. After programming, the printer prints the remainder of the label. B0 to B30 The printer backfeeds the label for the specified distance and then begins programming. To account for the backfeed, allow empty media liner to extend out of the front of the printer when using a backward programming position. up = move to the next value down = move to the previous value **For other RFID printers:** *Absolute Mode* (all firmware versions): xxxx = 0 to label length (in dot rows). Move the media to the specified position xxxx on the label, measured in dot rows from the label top, before encoding. Set to 0 (no movement) if the tag is already in the effective area without moving the media. *Relative Mode* (firmware versions V53.17.6 and later): F0 to Fxxx (where xxx is the label length in millimeters or 999, whichever is less) The printer prints the first part of a label until it reaches the specified distance and then begins programming. After programming, the printer prints the remainder of the label. B0 to B30 (Does not apply to the RP4T printer.) The printer backfeeds the label for the specified distance and then begins programming. To account for the backfeed, allow empty media liner to extend out of the front of the printer when using a backward programming position. *Default value:* **For the R2844-Z and RPAX:** 0 (no movement) **For printers using V53.17.6, V74.19.6Z, and later:** F0 (which moves the leading edge of the label to the print line) **For all other printers or firmware:** label length minus 1 mm (1/16 in.)

Parameters	Details
v = length of void printout	Sets the length of the void printout in vertical (Y axis) dot rows. *Accepted values:* 0 to label length *Default value:* label length
n = number of labels to try encoding	The number of labels that will be attempted in case of read/encode failure. *Accepted values:* 1 to 10 *Default value:* 3
e = error handling	If an error persists after the specified number of labels are tried, perform this error handling action. *Accepted values:* N = No action (printer drops the label format causing the error and moves to the next queued label) P = Place printer in Pause mode (label format stays in the queue until the user cancels) E = Place printer in Error mode (label format stays in the queue until the user cancels) *Default value:* N **Note** • You can set the printer to send an error message to the host for each failure. To enable or disable this unsolicited error message, refer to the ^SX and ^SQ ZPL commands. Use V for the condition type for an RFID error.

Parameters	Details
a = signals on applicator	**Note •** This parameter does not apply to the R2844-Z. For the R4Mplus, this parameter applies only to printers with firmware version SP994*X* (R4Mplus European version). **Single Signal Mode** In this mode, one start print signal starts printing. Then, at the program position (parameter p), the printer automatically stops and encodes the tag. Printing continues, and a single end print signal signifies the completion of the label. **Double Signal Mode** With RFID, when there is a non-zero program position, the label is logically split into two parts. The first part is printed, the tag encodes, and then the second part prints. If this parameter is set to "D," then the label is split into two and requires both portions of the label to be controlled by the applicator. This means that a start print signal triggers the first portion of the label, and then when the printer reaches the RFID program position (and the motor stops), an end print signal is provided. In this mode, a second start print signal is required to print the rest of the label. When the label is complete, a final end print signal is provided. **Note •** If parameter p is zero, then single signal mode is used (parameter ignored). If p is F0 (or B0) with backfeed-after, then single signal mode is used (parameter ignored). *Accepted values:* S = single signal D = double signal (For the R110*PAX*4, Double mode will work only if the read/write position is changed from the default of zero.) *Default value:* S
c = reserved	Not applicable.
s = void print speed	**Note •** This parameter does not apply to the R2844-Z printer or the ZD500R printer. For the R4Mplus printer, this parameter applies only to printers with firmware version SP994*X* (R4Mplus European version). If a label is voided, the speed at which "VOID" will be printed across the label. *Accepted values:* any valid print speed *Default value:* the printer's maximum print speed

Supported Tag Types Table 22 shows the tag types supported by different RFID printers/print engines and firmware versions. Depending on your country or on the firmware version that you are using, your printer may not support all of the tag types listed. If you specify an unsupported tag type, the printer uses the default value. If a tag type is shown as supported but does not work with your printer, you may need to upgrade the printer's firmware (see http://www.zebra.com/firmware).

Table 22 • Supported Tag Types and Default Values

Printer	UHF Printers													HF Printers		
	ZD500R	R110Xi4	R110*Xi* R170*Xi*		R110*PAX4*				R4Mplus				RZ400/ RZ600	R110*Xi* HF		R2844-Z
Firmware Version	V74.19.6Z and later	V53.17.7 and later	R60.13.*X*	R60.15.*X* and later	R62.13.*X*	R62.15.*X* and later	R63.13.*X*	R63.15.*X* and later	SP994O, SP999E, SP1027E, SP1082E, and earlier	SP994P, SP999F, SP1027F, SP1082F, and later	SP1056D and earlier	SP1056E and later	R53.16.*X* and later	R65.13.*X*	R65.15.*X* and later	all
Tag Type																
UHF Tag Types and Options																
None (no tag type specified)	—	—	*	*	*	*	—	—	—	—	—	—	—	—	—	—
EPC Class 0	—	—	*	*	*	*	—	—	—	—	—	—	—	—	—	—
EPC Class 0 Plus	—	—	*	*	*	*	—	—	—	—	—	—	—	—	—	—
EPC Class 1 64-bit	—	—	*	*	*	*	—	—	—	—	—	—	—	—	—	—
EPC Class 1 96-bit	—	—	#	*	#	*	—	*	*	*	—	—	—	—	—	—
UCODE EPC 1.19	—	—	* a	*	—	*	#	*	#	*	#	*	—	—	—	—
Impinj Class 0 Plus	—	—	*	*	*	*	—	—	—	—	—	—	—	—	—	—
ISO 18000-06A	—	—	—	—	*	—	—	*	*	*	—	—	—	—	—	—
EPC Class 1, Generation 2 (Gen 2)	#	#	*	#	*	#	—	#	*	#	*	#	#	—	—	—
ISO 18000-06B	—	—	*	*	*	*	—	*	*	*	*	*	—	—	—	—
HF Tag Types and Options																
Auto-detect the tag type by querying the tag	—	—	—	—	—	—	—	—	—	—	—	—	—	—	—	#
Tag*It (Texas Instruments Tagit tags)	—	—	—	—	—	—	—	—	—	—	—	—	—	—	—	*
I*code (Phillips Icode tags)	—	—	—	—	—	—	—	—	—	—	—	—	—	—	—	*
Pico Tag (Inside Technology's)	—	—	—	—	—	—	—	—	—	—	—	—	—	—	—	*
ISO 15693	—	—	—	—	—	—	—	—	—	—	—	—	—	#	#	*
EPC tag	—	—	—	—	—	—	—	—	—	—	—	—	—	—	—	*
UID Tag	—	—	—	—	—	—	—	—	—	—	—	—	—	—	—	—
Mifare UltraLight	—	—	—	—	—	—	—	—	—	—	—	—	—	*	*	—

= Default value * = Accepted value — = Not supported

a. Requires R60.13.0.13ZD or later.

Example 1 • The following are examples of Absolute Mode and Relative Mode for the tag position parameter (parameter `p`).

Absolute Mode

1. `^RS,520` sets the encode position at 520 dots from the top edge of the label.
2. `^RS,0` programs the tag without moving the media.

Relative Mode

1. `^RS,F1` sets the encode position 1 mm forward from the leading edge of the label.
2. `^RS,B10` sets the encode position 10 mm backwards from the leading edge of the label.
3. `^RS,F0` sets the encode position at the leading edge of the label.
4. `^RS,B0` sets the encode position at the leading edge of the label.

Example 2 • The following shows the difference between absolute and relative programming positions for the tag position parameter (parameter `p`) with a 6-inch (152-mm, 1216-dot) label length. The end results are that the tag is programmed with the label in the same position.

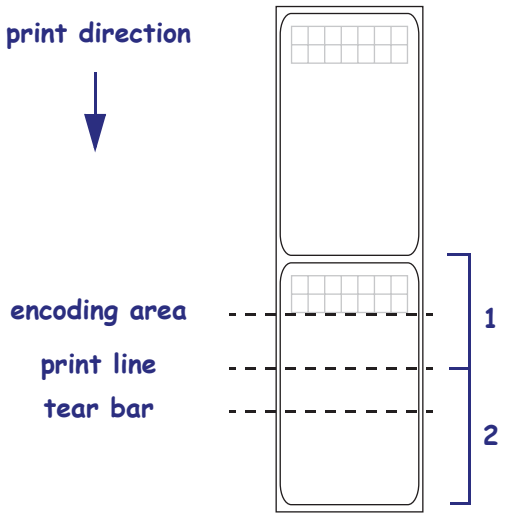

1	`^RS,496`, Absolute Mode, 496 dots from the top of the label
2	`^RS,F90`, Relative Mode, 90 mm from the leading edge of the label

^RT – Read RFID Tag

Note • The ^RT command is provided only for backward-compatibility with label formats that were developed for older Zebra RFID printers. See *Printer and Firmware Compatibility* on page 384 for the list of printers and firmware with which you should not use this command.

Description Use this command to tell the printer to read the current RFID tag data. The data can be returned to the host via the ^HV command.

Format ^RT#,b,n,f,r,m,s

Parameters	Details
# = number to be assigned to the field	*Accepted values:* 0 to 9999 *Default value:* 0
b = starting block number	*Accepted values:* 0 to *n*, where *n* is the maximum number of blocks for the tag. *Default value:* 0
n = number of blocks/bytes to read	*Accepted values:* 1 to *n*, where *n* is the maximum number of blocks for the tag type minus the starting block number. For example, if the tag has 8 blocks (starting with block 0) and you start with block 6, *n* can be 2. This would return block 6 and block 7 information. *Default value:* 1
f = format	*Accepted values:* 0 = ASCII 1 = Hexadecimal *Default value:* 0
r = number of retries	Changes the number of times that the printer attempts to read a particular block of a single RFID tag. (Same retry rules as the ^RR command.) *Accepted values:* 0 to 10 *Default value:* 0
m = motion	Enables or disables RFID motion for the current field. *Accepted values:* 0 = Feed label after writing. 1 = No feed after writing. Other ZPL may cause a feed. *Default value:* 0

Parameters	Details
`s` = special mode	**Note •** This parameter is used only for the printers referenced here. **For R4Mplus printers with firmware version SP920*X* (U.S. version):** Specify actions for mismatched checksums. For EPC Class 1 (Alien reader) only. Not applicable for EPC class 0. *Default value:* 0 *Accepted values:* `0` = Do not read if mismatched checksum `1` = Read even if mismatched checksum **For R110*Xi* HF and R2844-Z printers:** Specify data order. *Default value:* 0 *Accepted values:* `0` = least significant byte first `1` = most significant byte first

Example 1 • This example reads a tag, prints the data on a label, and sends the string `Tag Data:`*xxxxxxxx* back to the host. The data read will go into the `^FN1` location of the format. The printer will retry the command five times, if necessary.

```
^XA
^FO20,120^A0N,60^FN1^FS
^RT1,,,,5^FS
^HV1,,Tag Data:^FS
^XZ
```

Example 2 • This example reads from a tag twice and prints the results on a label.

```
^XA
^FO20,120^A0N,60^FN1^FS
^FO20,100^A0N,20^FN2^FS
^RT1,7,3,,5^FS
^RT2,3,2,,5^FS
^XZ
```

The first `^RT` command starts at block 7 and reads three blocks of data in ASCII format. The data read will go into the `^FN1` location of the format. The printer will retry the command five times, if necessary.

The second `^RT` command starts at block 2 and reads two blocks of data in ASCII format. The data read will go into the `^FN2` location of the format. The printer will retry the command five times, if necessary.

^RU – Read Unique RFID Chip Serialization

Use this command to read the TID (Tag ID) data from the current chip and format a unique 38-bit serial number, which will be placed in the lower (least significant) 38 bits of the EPC code.

Format ^RUa,b

Parameters	Details
a = prefix	Specifies the prefix in ASCII Binary *Accepted Values:* Only ASCII characters 1 and 0 are accepted. Maximum of 38 characters. The number of bits in the value specifies the length of the prefix. The prefix is placed as the left-most (most significant) bits in the unique serial number. If nothing is specified, the default value will be used. *Default Value:* The MCS prefix is determined by the MDID in the TID of the chip read: • 100 = EM Micro • Impinj = 101 • Alien = 110 • NXP = 111
b = special character	Special character for serial number inclusion. *Accepted Values:* Any ASCII character other than the current Command character, Control character, Delimiter character, or any of the Real-Time Clock (RTC) characters. *Default Value:* #

Note • Serial number inclusion:

One of several data elements can be included into any ^FD data string in the same way that Real Time Clock data is included. Use any of the commands below to include a data pattern based on the serial number. These are defined using the default value for the Special Character.

#S = include 38-bit serial number derived from TID in decimal form.

#H = include 38-bit serial number derived from TID in hexadecimal form.

#E = include the entire 96-bit EPC code, including the 38-bit serial number derived from TID in decimal form.

#F = include the entire 96-bit EPC code, including the 38-bit serial number derived from TID in hexadecimal form.

#P = include the entire 96-bit EPC code, but use the tag's preprogrammed, 38-bit SGTIN serial number in decimal form.*

#Q = include the entire 96-bit EPC code, but use the tag's preprogrammed, 38-bit SGTIN serial number in hexadecimal form.*

* If the EPC has been preprogrammed (typically by the manufacturer) with the chip-based RFID serialization scheme, then the serialized data does not have to be written back to the EPC memory, which saves time. #P and #Q simply format the data that is read from the EPC memory bank.

Example 1 • Read the TID from the tag, create a serial number based on the tag type, write `12<serial number (5 bytes)>000000000000` to the 96-bit EPC field, and print the serial number (in hex format) on the label.

```
^XA
^RU
^FO10,10^A0N,50,50^FDSerial Number: #H^FS
^RFW,H^FD12#H^FS
^XZ
```

Example 2 • Read the TID from the tag, create a serial number based on the tag type, write the serial number to the EPC field (lower 38 bits) while maintaining the contents of the rest of the EPC memory, print `Serial Number: <serial number in hex format>` on the label, and return `Serial Number: <serial number in hex format>` to the host. Perform this operation on three label formats.

```
^XA
^RU
^FO10,10^A0N,50,50^FN1^FS
^FN1^FDSerial Number: #H^FS
^FH^HV1,24, ,_0D_0A,L^FS
^RFW,H^FD#F^FS
^PQ3
^XZ
```

Example 3 • Read the full EPC (already serialized) from the tag, print `Serial Number: <full EPC in decimal format>` on the label, and return `Serial Number: <full EPC in decimal format>` to the host.

```
^XA
^RU
^FO10,10^A0N,50,50^FN1^FS
^FN1^FDSerial Number: #P^FS
^FH^HV1,44, ,_0D_0A,L^FS
^XZ
```

~RV – Report RFID Encoding Results

Important • This command is not supported by all printers or firmware. See *Printer and Firmware Compatibility* on page 384 for the list of printers and firmware with which you can use this command.

Description Use this command to tell the printer to send RFID encoding success or failure results to the host computer after each label format completes.

Format ~RVa

Parameters	Details
a = enable/disable	Enables or disables the results reporting feature. *Accepted Values:* E = Enable D = Disable *Default Value:* D

Example 1 • Assume that the following code is sent and that there is no RFID tag in the field.

```
~RVE
^XA
^RS8,0,,3
^RMY
^RFR,H
^XZ
```

The printer attempts to program a tag three times and then returns the following to the host:

```
_-,3_
```

The minus sign indicates that the programming attempt failed entirely and voided three labels.

Example 2 • Assume that the same code is sent and that the first two attempts at programming a tag are unsuccessful. The third attempt succeeds.

```
~RVE
^XA
^RS8,0,,3
^RMY
^RFR,H
^XZ
```

The printer attempts to program a tag three times and then returns the following to the host:

```
_+,2_
```

The plus sign indicates that the programming attempt was successful and voided two labels.

^RW – Set RF Power Levels for Read and Write

Important • This command is not supported by all printers or firmware. See *Printer and Firmware Compatibility* on page 384 for the list of printers and firmware with which you can use this command.

Description Use this command to set the RFID read and write power levels if the desired levels are not achieved through RFID tag calibration. If not enough power is applied, the tag may not have sufficient power for programming, and tag data will fail to encode. If too much power is applied, the extra power may cause data communication errors or may cause the wrong tag to be programmed.

Note • The R110Xi4 and ZD500R printers automatically select the best antenna element and read/write power levels for the media during RFID tag calibration. The R110Xi4 printer may also set the levels during an adaptive antenna sweep. Use the `~HL` command (see *^HL or ~HL* on page 389) to view the antenna element and power settings being used.

Format `^RWr,w,a`

Parameters	Details
`r` = read power	This parameter sets the power level to match the desired output as calibrated in the factory. **R53.16.3, V53.17.5, and later:** *Values:* 0 to 30 *Default Value:* 16 **R60.16.4, R62.16.4, R63.16.4, SP994Q, SP999G, SP1027G, SP1056F, SP1082G, and later:** *Values:* `0` to `30`, `H` (high), `M` (medium), `L` (low) *Default Value:* `L` **R65.X and older versions of other firmware:** *Accepted Values:* `H` = high `M` = medium `L` = low *Default Value:* `L`

Parameters	Details
`w` = write power	**Note •** This parameter is ignored on the R110*Xi* HF printer (firmware version R65.X) because read and write powers cannot be specified separately. The printer uses the value that you specified for read power for both the read and write power settings. This parameter sets the power level to match the desired output as calibrated in the factory. **R53.16.3, V53.17.5, and later:** *Values:* 0 to 30 *Default Value:* 16 **R60.16.4, R62.16.4, R63.16.4, SP994Q, SP999G, SP1027G, SP1056F, SP1082G, and later:** *Values:* `0` to `30`, `H` (high), `M` (medium), `L` (low) *Default Value:* `L` **Older versions of firmware:** *Accepted Values:* `H` = high `M` = medium `L` = low *Default Value:* `L`

Parameters	Details
a = RFID antenna element selection	**Note •** This parameter does not appply to all RFID printers. **R110*Xi* HF (R65.X):** This parameter selects the antenna port that provides the best results for reading and writing. *Accepted Values:* 1 = antenna port 1 2 = antenna port 2 *Default Value:* 1 **R110Xi4 (V53.17.5 and later):** This parameter selects an antenna element from the printer's antenna array. *Accepted Values:* A1, A2, A3, A4, B1, B2, B3, B4, C1, C2, C3, C4, D2, D3, D4, E2, E3, E4, F2, F3, F4 (combinations D1, E1, and F1 are invalid) 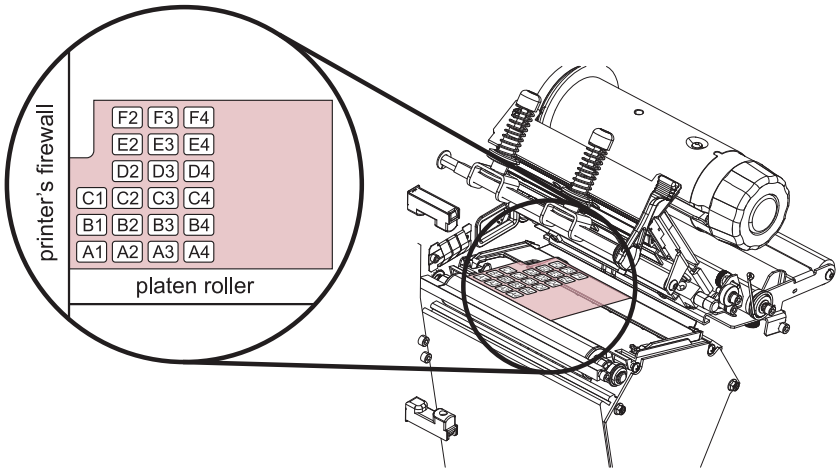 *Default Value:* A4

Example 1 • The following command selects the antenna at row D, column 3 on an R110Xi4 printer:

```
^RW,,D3
```

Example 2 • The following command sets the read/write power level to Medium and selects antenna 2 on an R110*Xi* HF printer:

```
^RWM,,2
```

Example 3 • The following command sets the read and write power levels to High on an R110*PAX*4 printer:

```
^RWH,H
```

^RZ – Set RFID Tag Password and Lock Tag

Important • This command is not supported by all printers or firmware. See *Printer and Firmware Compatibility* on page 384 for the list of printers and firmware with which you can use this command.

Description Use this command to define a password for a tag during writing.

With Gen 2 tags, you can lock a tag's memory bank with an access password or define a kill password that can be used to permanently disable the tag. If you do not set access or kill passwords for a tag, the tag ignores any read or write commands that try to use these functions.

Note • The printer can set a kill password, but the printer cannot kill a tag.

Format `^RZp,m,l`

Parameters	Details
`p` = password	This parameter sets a password for the RFID tag. **For tag types other than Gen 2:** The password is 8 bits. The memory bank and lock style parameters are ignored. The password must be 2 hexadecimal characters long. *Accepted Values:* 00 to FF (hexadecimal) *Default Value:* 00 **For Gen 2 tag type only:** Gen 2 tags use a 32-bit password and specify the memory bank and lock style. The password must be 8 hexadecimal characters long. Use *^RF* on page 401 to read the passwords. *Accepted Values:* 00000000 to FFFFFFFF (hexadecimal) *Default Value:* none
`m` = memory bank	**Note •** This parameter applies to Gen 2 tags only. This parameter specifies the type of RFID tag password. *Accepted Values:* `K` = kill password `A` = access password `E` = EPC `T` = tag identifier (TID) `U` = user *Default Value:* none

Parameters	Details
1 = lock style	**Note** • This parameter applies to Gen 2 tags only. This parameter specifies the RFID tag password status. *Accepted Values:* U = unlocked L = locked O = permanently unlocked (open) P = permanently locked (protected) W = write value (used only for the kill password memory bank) *Default Value:* none

Example 1 • On a tag that is not Gen 2, this example encodes 5A as the tag password.

```
^XA
^RZ5A^FS
^XZ
```

Example 2 • On a Gen 2 tag, this example encodes EPC data 112233445566778899001122 to the tag in Hex format, write protects the tag's EPC data with password 1234ABCD, and leaves the tag's access password unlocked.

```
^XA
^RFW,H^FD112233445566778899001122^FS
^RZ1234ABCD,E,L^FS
^XZ
```

Example 3 • On a Gen 2 tag, this example encodes EPC data 112233445566778899001122 to the tag in Hex format, write protects the tag's EPC data with password 1234ABCD, and makes the tag's access password unreadable.

```
^XA
^RFW,H^FD112233445566778899001122^FS
^RZ1234ABCD,E,L^FS
^RZ1234ABCD,A,L^FS
^XZ
```

The following code unprotects EPC data 112233445566778899001122 using the password 1234ABCD, encodes EPC data newdata to the tag in ASCII format, and then write protects the tag's new EPC data. The access password and its lock state are not changed, so the access password remains unreadable.

```
^XA
^RZ1234ABCD,E,U^FS
^RFW,A^FDnewdata^FS
^RZ1234ABCD,E,L^FS
^xz
```

Example 4 • This example unlocks the locked access password from the previous example.

```
^XA
^RZ1234ABCD,A,U^FS
^XZ
```

^WF – Encode AFI or DSFID Byte

Important • This command is not supported by all printers or firmware. See *Printer and Firmware Compatibility* on page 384 for the list of printers and firmware with which you can use this command.

Description Use this command to encode the AFI or DSFID byte to a tag. Error handling is set by the ^RS command.

Format `^WFr,m,w,f,b`

Parameters	Details
`r` = number of retries	*Accepted values:* 0 to 10 *Default value:* 0
`m` = motion	*Accepted values:* 0 = Feed label after writing. 1 = No Feed after writing. Other ZPL may cause a feed. *Default value:* 0
`w` = write protect	*Accepted values:* 0 = Not write protected 1 = Write protect *Default value:* 0
`f` = data format	*Accepted values:* 0 = ASCII 1 = Hexadecimal *Default value:* 0
b = type of byte to read	*Accepted values:* `A` = AFI byte `D` = DSFID byte *Default value:* A

Example 1 • This example encodes data “R” (hex 52) as the AFI byte. The printer will try the command up to five times, if necessary.

```
^XA
^WF5^FDR
^XZ
```

Example 2 • This example encodes data hex 66 as the AFI byte. The printer will try the command up to three times, if necessary.

```
^XA
^WF3,,,1^FD66
^XZ
```

Example 3 • This example encodes data hex 77 as the DSFID byte. The printer will try the command up to four times, if necessary.

```
^XA
^WF4,,,1,D^FD77
^XZ
```

^WT – Write (Encode) Tag

Note • The ^WT command is provided only for backward-compatibility with label formats that were developed for older Zebra RFID printers. See *Printer and Firmware Compatibility* on page 384 for the list of printers and firmware with which you should not use this command.

Description Use this command to encode the current RFID tag. Check the amount of data memory available for the tag that you will be using. If you send more data than the memory can hold, the printer truncates the data.

Format ^WTb,r,m,w,f,v

Parameters	Details
b = block number	Specifies the block number to encode. This parameter is tag-dependent. • For most tags, use block 0. • For EPC Class 0 Plus, block 0 is EPC data, and block 1 is user data. • For the R4Mplus, this parameter does not apply to printers with firmware version SP902*X*. With other versions of firmware in this printer, you can encode 12 bytes (96 bits) to block 0, but you can encode only the first byte of block 1. *Accepted Values:* 0 to *n*, where *n* is the maximum number of blocks for the tag. *Default Value:* 0
r = number of retries	Changes the number of times that the printer attempts to encode a particular block of a single RFID tag. (Same function as the ^RR command.) *Accepted Values:* 0 to 10 *Default Value:* 0
m = motion	Enables or disables RFID motion. (Same function as the ^RM command.) *Accepted Values:* 0 = Feed label after writing 1 = No feed after writing (other ZPL may cause a feed) *Default Value:* 0
w = write protect	*Accepted Values:* 0 = Not write protected 1 = Write protected *Default Value:* 0
f = data format	*Accepted Values:* 0 = ASCII 1 = Hexadecimal *Default Value:* 0

Parameters	Details
	This parameter is not used in the R2844-Z.
For the R110*Xi* HF: `v` = reverse the data order	**For the R110*Xi* HF:** Reverses the data order. *Accepted Values:* `N` = Do not reverse the data order (Most significant byte first for Tag*It and PicoTag. Last significant byte first for I*code and ISO 15693) `Y` = Reverse the data order *Default Value:* N
For other supported printers: `v` = verify valid data	**For other supported printers:** For reliability, some manufacturers encode tags with known data (such as `A5A5`). This parameter flags whether the preprogrammed data is verified. (Same function as the `^WV` command.) *Accepted Values:* `N` = Do not verify `Y` = Verify valid data before writing *Default Value:* N

Example • This sample encodes data “RFIDRFID” and will try writing up to five times, if necessary.

```
^XA
^WT,5^FDRFIDRFID^FS
^XZ
```

^WV – Verify RFID Encoding Operation

Important • This command is not supported by all printers or firmware. See *Printer and Firmware Compatibility* on page 384 for the list of printers and firmware with which you can use this command.

Description Use this command to enable or disable the write verify function. When write verify is enabled, this command verifies the RFID encoding operation to ensure that the tag about to be programmed contains the hex data “A5A5” in the first two bytes. This parameter is not persistent (carried over from label to label).

Format `^WVe`

Parameters	Details
`e` = enable	*Accepted values:* Y or N *Default value:* N