Zebra Technologies Corporation

Applicator Port Kit Installation Instructions

This kit includes the Applicator Port Kit and the documentation necessary to install it on the *Xi*II™, *Xi*III™, *Xi*III*Plus*™, and R-140™-Series printers. Read these instructions thoroughly before attempting to install this kit.

REFERENCE MATERIAL

31450L	*Xi*II-Series Maintenance Manual	48152L	*Xi*III-Series Maintenance Manual

TOOLS REQUIRED

Phillips Screwdrivers	Anti-Static Mat
Standard Allen Wrench Set	Anti-Static Wrist Strap

Printer Disassembly

CAUTION:

OBSERVE PROPER ELECTROSTATIC SAFETY PRECAUTIONS WHEN HANDLING ANY STATIC-SENSITIVE COMPONENTS SUCH AS PRINTED CIRCUIT BOARDS AND PRINTHEADS.

1. Turn printer power Off (**O**) and disconnect the AC power cord and communication cables.
2. Refer to Figure 3. Remove the electronics cover by removing the screws securing it.

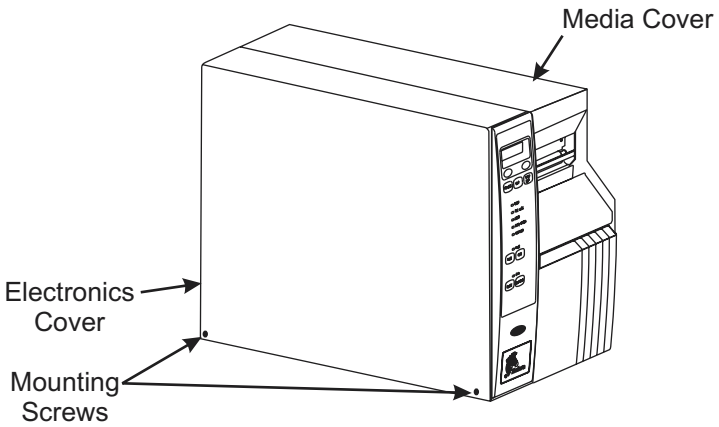

Figure 1. Electronics Cover Removal and Installation

3. Refer to Figure 2. For a new installation, remove one of the option board cover plates and retain the screws.

4. For a defective board replacement, disconnect the cable connectors from the existing applicator interface board assembly to the main logic board and the DC power supply.

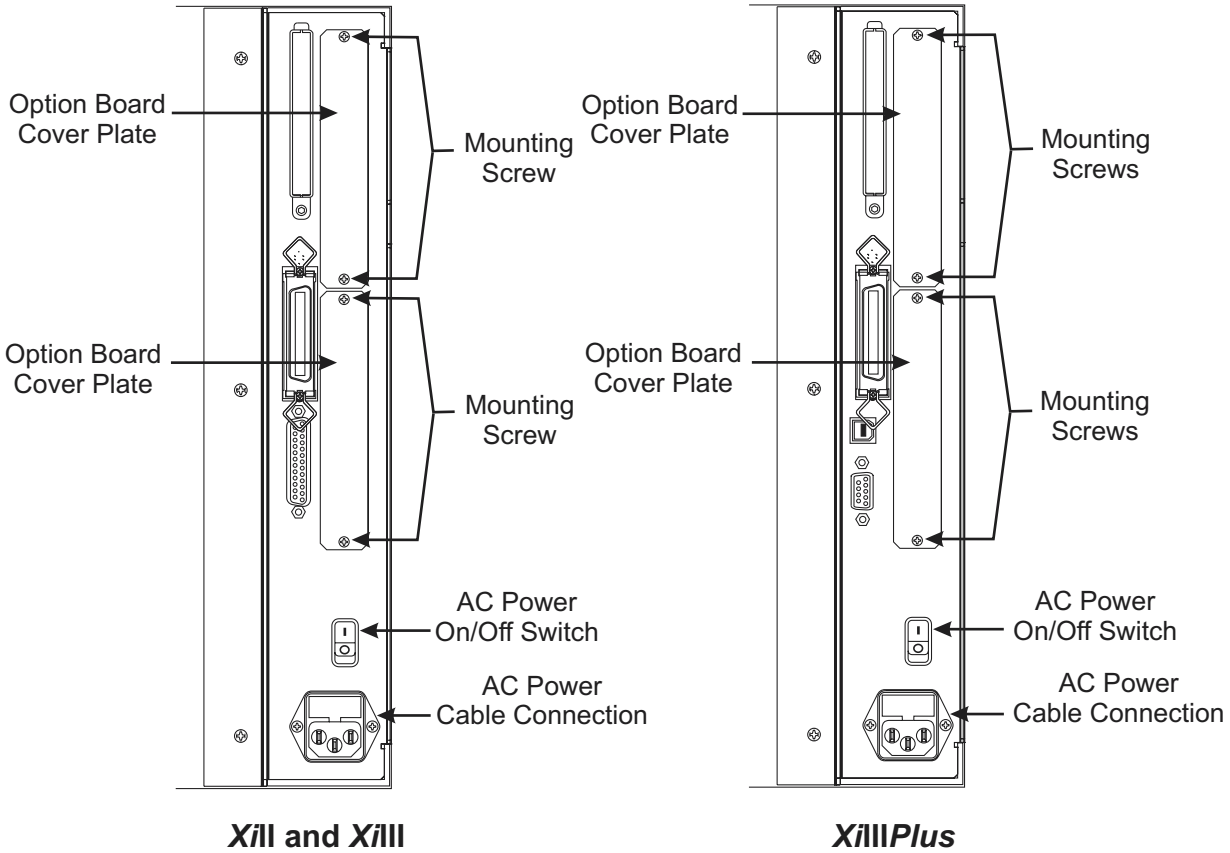

Figure 2. Rear View

5. Install the applicator interface board assembly as shown in Figure 3 using the two screws previously removed.

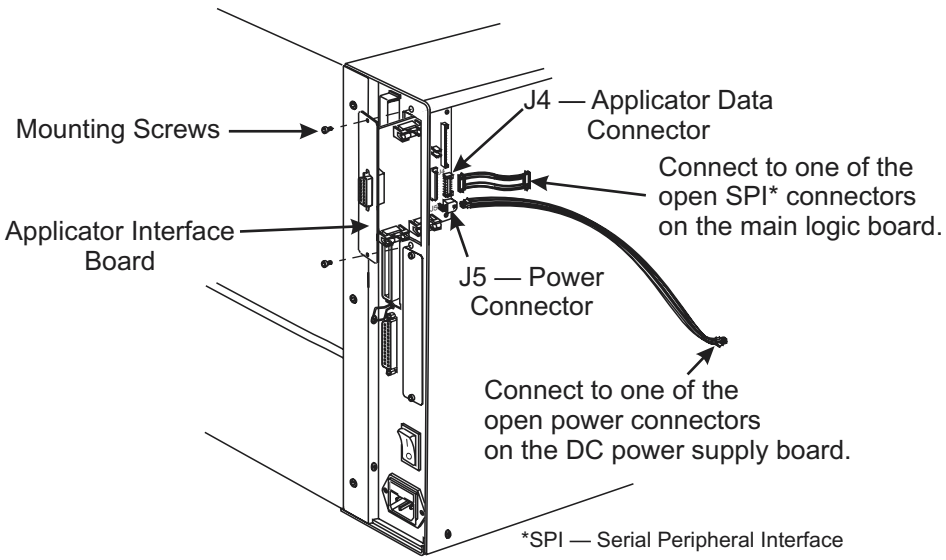

Figure 3. Applicator Interface Board Installation

6. Refer to Figures 4 or 5. Connect the ribbon cable to one of the open SPI (Serial Peripheral Interface) connectors.

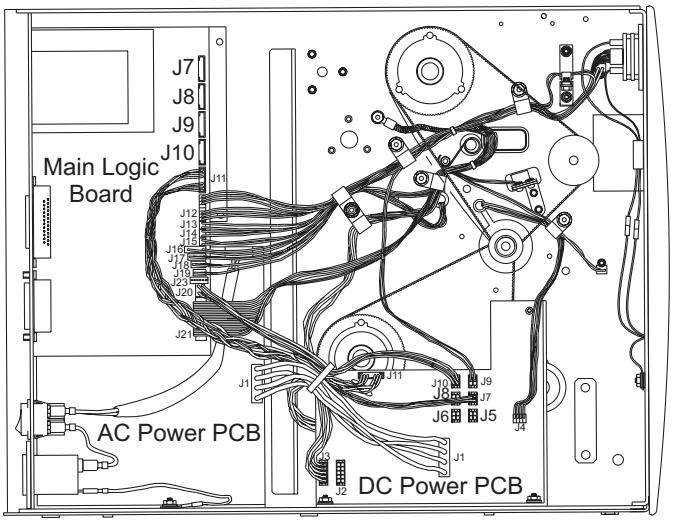

Figure 4. *Xi*II, *Xi*III, and R-140 Interconnections

Table 1. *Xi*II, *Xi*III, and R-140 Interconnections

Connector	Description	Connector	Description
J1	Memory Board Connection	J13	Lower Media Sensor
J2	25-Pin External Serial Port	J14	Upper Media Sensor
J3	External Parallel Port	J15	Lower Take-Label Sensor
J4	N/A	J16	Upper Take-Label Sensor
J5	N/A	J17	Ribbon Sensor
J6	N/A	J18	Head-Open Sensor
J7	SPI* Connector	J19	Black-Mark Sensor
J8	SPI Connector	J20	DC Power Supply J10
J9	SPI Connector	J21	Printhead Data
J10	SPI Connector, Cutter Board J1	J22	N/A
J11	DC Power Supply J11	J23	RFID Connector
J12	LCD Display Board		
NOTE: J5–J10 have the same output on the DC power supply.			
J1	J1 AC Power PCB	J7	Cutter Option
J2	Printhead Power for 220 *Xi*II/*Xi*III Printers	J8	N/A
J3	Printhead Power for all *Xi*II/*Xi*III Printers	J9	LCD Display Power
J4	Stepper Motor	J10	J20 Main Logic PCB
J5	N/A	J11	J11 Main Logic PCB

*SPI—Serial Peripheral Interface

7. Reinstall the electronics cover.

8. Reconnect the AC power cord and communication cables, and turn the printer On (**I**).

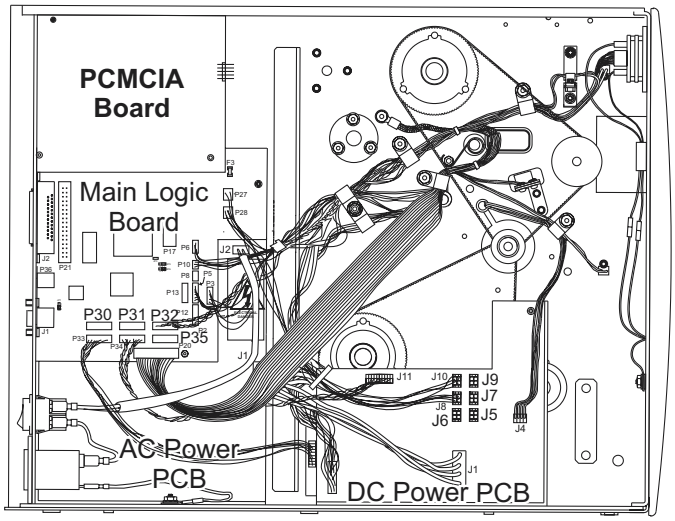

Figure 5. *Xi*III*Plus* Interconnections

Table 2. *Xi*III*Plus* Interconnections

Connector	Description	Connector	Description
J1	9-Pin External Serial Port	P16	N/A
J2	40-Pin External Parallel Port	P17	N/A
JP1	Jumper Pin 2 to Pin 3	P18	N/A
JP2	N/A	P19	N/A
JP3	Open	P20	Printhead Data
JP4	Jumper Pin 1 to Pin 2	P21	Internal Parallel Connector
JP5	Jumper Pin 1 to Pin 2	P22	N/A
P1	Lower Take-Label Sensor	P23	PCMCIA Board Connector
P2	Upper Take-Label Sensor	P24	PCMCIA Board Connector
P3	Head-Open Sensor	P25	N/A
P4	N/A	P26	N/A
P5	Ribbon Sensor	P27	LCD Display Control Board Power
P6	Reflective Media Sensor	P28	DC Power Supply J10
P7	N/A	P29	N/A
P8	Transmissive Media Sensor	P30	SPI* Connector
P9	N/A	P31	SPI Connector
P10	Transmissive Media Sensor	P32	SPI Connector LCD Display Board
P11	N/A	P33	SPI Connector Cutter Board
P12	N/A	P34	SPI Connector DC Power Supply J11
P13	N/A	P35	SPI Connector
P14	N/A	P36	USB Port
P15	N/A		
NOTE: J5–PJ10 have the same output on the DC power supply.			
J1	J1 AC Power PCB	J7	Cutter Option
J2	Printhead Power for 220*Xi*III*Plus* Printers	J8	N/A
J3	Printhead Power	J9	LCD Display Power
J4	Stepper Motor	J10	J20 Main Logic PCB
J5	N/A	J11	J11 Main Logic PCB
J6	N/A		

*****SPI—Serial Peripheral Interface

APPLICATOR PORT PIN DESCRIPTIONS

Table 3. Pin Descriptions for the Applicator Port

Pin #	Signal Description	Direction	Mode	Functional Description
1	GND (+5V Return)	Power	—	Interface signal ground may be connected to printer ground or isolated by removing jumpers JP1 and JP2 on the applicator interface circuit board.
2	+5V (750mA MAX)	Power	—	Interface power supply, intended to supply power to remote optoisolators or provide power for internal optoisolators if jumpers JP1 and JP2 are removed.
3	~START_PRINT	Input	3–6	Asserts LOW to enable printer to begin printing if a format is ready. De-asserts HIGH to inhibit printing of a new label.
4	~FEED	Input	All	Asserts LOW to trigger repeated feeding of blank labels. De-asserts HIGH to stop feeding blank labels and register to the top of the next label.
5	~PAUSE	Input	All	Asserts LOW to pause printer. A printer pause is triggered on a high to low transition of this signal. LOW to HIGH transitions of this signal have no effect. The printer can be taken out of pause via either the front panel or a ZPL command.
6	~REPRINT	Input	TBD	To be determined.
7	+28V (1.5A MAX)	Power	—	Interface power supply, intended to supply power to nearby sensors as required.
8	GND (+28V Return)	Power	—	Interface power ground.
9	—	—	—	—
10	~SVCE_REQ*	Output	All	Asserts LOW while the printhead is open, ribbon is out, media is out, or an operational fault has occurred.
11	~END_PRINT	Output	Off	Applicator interface is off.
			1	Asserts LOW only while the printer is moving the label forward.
			2	Asserts HIGH only while the printer is moving the label forward.
			3	Asserts LOW for 20 milliseconds when a label has been completed and positioned. Not asserted during continuous printing modes.
			4	Asserts HIGH for 20 milliseconds when a label has been completed and positioned. Not asserted during continuous printing modes.
12	~MEDIA_OUT	Output	All	Asserts LOW while there is no media in the printer.
13	~RIBBON_OUT	Output	All	Asserts LOW while there is no ribbon in the printer.
14	~DATA_RDY	Output	All	Asserts LOW when sufficient data has been received to begin printing the next label. De-asserts HIGH whenever print stops after the current label because of a pause condition or absence of a label format.
15	—	—	—	—