Connecting the Printer to the Computer

The Zebra 2824 Plus printers support a variety of interface options and configurations. These include: Universal Serial Bus (USB) interface, RS232 Serial, Parallel (IEEE 1284.4) and 10/100 Ethernet.

Caution • Keep the power switch in the OFF position when attaching the interface cable. The power cord must be inserted into the power supply and the power receptacle on the back of the printer before connecting or disconnecting the communications cables.

Important • This printer complies with FCC "Rules and Regulations," Part 15, for Class B Equipment, using fully shielded data cables. Use of un-shielded cables may increase radiated emissions above the Class B limits.

Interface Cable Requirements

Data cables must be of fully shielded construction and fitted with metal or metallized connector shells. Shielded cables and connectors are required to prevent radiation and reception of electrical noise.

To minimize electrical noise pickup in the cable:

- Keep data cables as short as possible (6 foot [1.83 m] recommended).
- Do not tightly bundle the data cables with power cords.
- Do not tie the data cables to power wire conduits.

Serial Communications

The required cable must have a nine-pin “D” type (DB-9P) male connector on one end, which is plugged into the mating (DB-9S) serial port located on the back of the printer. The other end of this signal interface cable connects to a serial port at the host computer. The 2824 Plus printer is configured from the factory to automatically detect and switch the serial port communications to match common serial port cabling and signal connection configurations: DTE and DCE. This allows the use of either common serial port interface cables. A common cable is a Null Modem (cross-over) cable and is the standard cable for Zebra printers. Early models of Zebra printers running the EPL programming typically utilized a straight through signal connections cable (no cross-over). For pinout information, refer to Appendix A.

The serial port communication settings between the printer and host (typically a PC) must match for reliable communication. The Bits per second (or Baud rate) and Flow control are the most common settings that get changed. The hosts (typically a Windows PC) needs to have the data Flow control changed to match the printer’s default communication method: **Hardware** and is noted by the Host Handshake setting **`DTR/Xon/Xoff`**. This combined hardware (DTR) and software (Xon/Xoff) mode may need to change depending upon the non-Zebra application software and the serial cable variation in use.

Serial communications between the printer and the host computer can be set by:

- Autobaud synchronization
- ZPL programming: **`^SC`** command
- EPL programming: **`Y`** command
- Set Get Do (SGD) programming: **`comm.type`**
- Resetting the printer to its default printer configuration.

Autobaud

Autobaud synchronization allows the printer to automatically match the communication parameters of the host computer. To autobaud:

1. Press and hold the feed button until the green status LED flashes once, twice, and then three times.
2. While the status LED flashes, send the **`^XA^XZ`** command sequence to the printer.
3. When the printer and host are synchronized, the LED changes to solid green. (No labels will print during autobaud synchronization.)

ZPL `^SC` Command

Use the Set Communications (**`^SC`**) command to change the communications settings on the printer.

1. With the host computer set at the same communications settings as the printer, send the **`^SC`** command to change the printer to the desired settings.
2. Change the host computer settings to match the new printer settings.

Refer to the *ZPL Programming Guide* for more information about this command.

EPL `Y` Command

Use the serial port setup (**`Y`**) command to change the communications settings on the printer.

1. With the host computer set at the same communications settings as the printer, send the **`Y`** command to change the printer to the desired settings. Note: the Y command does not support setting the data flow control, use the **`Xon/Xoff`** setting.
2. Change the host computer settings to match the new printer settings.

Refer to the *EPL Page Mode Programming Guide* for more information about this command.

Set Get DO `comm.type` Command

This SGD command controls how serial port cabling variations can be handled by the printer. The printer will by default, be in the 'Auto-detect' mode allowing the printer to detect and change between DTE and DCE cable wiring configurations automatically.

1. Send the printer a SGD command: **`!U1 setvar "comm.type" "value"`** where "value" is "auto", "dte", or "dce".

Resetting the Default Serial Port Parameters

Do the following to reset the communications parameters on the printer to the factory defaults (serial communication settings are: 1) Auto-detect (cable configuration) and 2) **`9600`** baud, **`8`** bit word length, **`NO`** parity, **`1`** stop bit, and **`DTR/XON/XOFF`** data flow control).

1. Press and hold the feed button until the green status LED flashes once, waits a moment and flashes twice, and then waits again before flashing three times (release immediately).
2. While the status LED rapidly flashes amber and green, press the feed button.

Once the printer has finished resetting the defaults, the serial communications between the printer and the host computer can be set by the ZPL **`^SC`** command or the EPL **`Y`** command.

Note • Early models of Zebra printers running the EPL programming language had **`9600`** baud, **`NO`** parity, **`8`** data bits, **`1`** stop bit and a **`HARDWARE`** and **`SOFTWARE`** (merged) data control (essentially DTR/Xon/Xoff) as the default serial port settings. The Windows operating system flow control setting was Hardware for most applications.

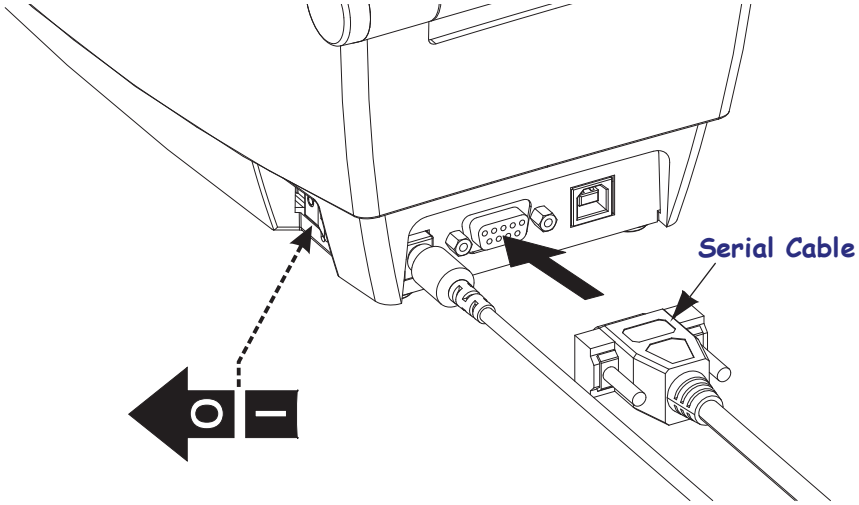

Installing Printer Drivers and Communicating with the Printer

Zebra provides the Zebra Setup Utilities (ZSU); a suite of Zebra printer drivers, utilities, and communications and installation tools for use with most Windows PC operating systems. Zebra Setup Utilities and Zebra Windows printer drivers are available on the user's CD and the Zebra web site (www.zebra.com) for latest versions.

Install the Zebra Setup Utilities before applying power to the printer connected to the PC (running a Zebra driver supported Windows operating system). Follow the Zebra Setup Utilities instructions to complete your printer installation.

Zebra Designer Driver (ZD) and Zebra Setup Utilities (which includes ZD): Windows Vista, Windows XP, Windows 2003 (server) and Windows 2000 operating systems support the USB and Parallel port communications with the 2824 Plus printers. The driver supports 32bit and 64 bit Windows operating systems and it is Windows Certified.

Note • The legacy Zebra Universal Driver (ZUD) printer driver does not support this printer.

Plug'N'Play (PnP) Printer Detection and Windows® operating systems

More recent Windows operating systems automatically detect the printer when it is connected via the USB interface. Depending on the hardware configuration and the Windows version, your printer may be PnP detected when connecting to the parallel and serial port interfaces. The printer and PC interface configuration must support and implement bi-directional communications for PnP operations.

The operating system automatically starts a "Add new hardware' wizard when connecting the printer for the first time to the PC. Close the wizard. Install the Zebra Designer Windows Driver found on the user's CD or for the latest driver go to www.zebra.com. Select the interface connection (USB, parallel, serial, Ethernet—tcp/ip) and then media size (closest match). Click on the 'Print test page' button to verify a successful installation.

The Windows operating system will detect and re-link a previously installed printer if it is reconnected to the USB interface or power is turned on after the PC has finished its restart of the operating system. Ignore the new device detected warnings and close the Task bar prompts. Wait several seconds for the operating system to match the printer to the driver software. The warnings will quit and the printer now should be ready to begin printing.

Universal Serial Bus (USB) Device Communications

The printer is a terminal device (not a host or hub) when using a universal serial bus interface. You can refer to the Universal Serial Bus Specification for details regarding this interface.
Note • Scanners, scales or other data input (terminal) devices must use the serial port (not the USB port) to send data to the printer.

Serial Port and Windows® operating systems

The Windows operating system default settings for the serial port communication closely match the printer's defaults settings with one exception; the data *Flow Control* settings. The Windows default data *Flow Control* setting is **NONE**. The 2824 Plus printer requires data *Flow Control* set to **Hardware**.

Power On Modes	
With the printer power on and top cover closed, press and hold the Feed button for several seconds. The green status LED will flash a number of times in sequence. The explanation at the right (Action) shows what happens when you release the key after the start specific number of flashes and before the next flash sequence starts.	
Flash Sequence	**Action**
*	**Configuration Status** - Prints a detailed printer configuration status label. The label can be used to verify printing, assist printer to computer communication configuration, maintenance, troubleshooting, and help us with customer care communications.
* **	**Standard Media Calibration** - The printer detects and sets media type and media length, and it adjusts the media sensors for optimal performance with the installed media. The printer will feed one to four labels. *Note: Users familiar with the Zebra EPL desktop printer use this Feed mode to replace power-up AutoSensing calibration.*
* ** ***	**Serial Port Configuration** - *Applies only to printers with serial interface ports.* To reset the communication parameters. Press and release the Feed button while the LED rapidly flashes amber and green. For autobaud synchronization: Send the **^XA^XZ** command sequence to the printer while the LED rapidly flashes amber and green. When the printer and host are synchronized, the LED changes to solid green. NOTE: No labels will print during autobaud synchronization.
* ** *** ****	**Factory Defaults** - Resets the printer to the default factory settings and modes. See the configuration label for a list of the primary settings affected by this Feed Mode option. Other settings are exclusively set, viewed and controlled by programming are also reset. The printer then performs a standard media calibration. Once the printer has entered the Factory Default mode, the status light will turn amber for three (3) seconds. During that time you may do two things: Do nothing and the printer will reset the factory defaults automatically as described above OR press and hold the feed button to enter a factory default reset modes for printers with a network printer option. Releasing the button after the first flash resets the network factory options only. Releasing the button after the second flash sequence (two flashes) will reset the printer defaults only. Releasing the button after the third flash sequence (three flashes) will reset both the printer and network settings.
* ** *** **** *****	**Print Width Adjustment** - Prints a succession boxes starting at the minimum print width and ending in the printer's maximum print width in 4mm increments. Press the Feed button once when the printer has reached the desired maximum print width. Note that the printer driver and applications can override this setting.
* ** *** **** ***** ******	**Print Darkness (Density) Adjustment** - Prints a succession of bar code simulation patterns starting at the minimum darkness (print density/heat) and ending in the printer's maximum darkness in increments of four (4) using the ZPL darkness setting range values. Press the Feed button once the pattern is clear and legible. Do not continue to increase the darkness setting. Bar code line widths may become distorted reducing readability. Note that the printer driver and applications can override this setting.
* ** *** **** ***** ****** *******	**Manual Media Calibration** - The printer runs extensive tests to detect and set media type and media length, and then it adjusts the media sensors for optimal performance with the installed media. Manual calibration is recommended whenever you are using pre-printed media, print on the liner or if the printer will not correctly auto calibrate. A graphical profile of the media sensing will print. See *Manual Calibration* on page 80 for more details and considerations.
If the Feed button remains pressed after a 8-flash sequence, the printer exits the configuration mode when the Feed button is released.	

Serial Port Interface

Pin	Description
1	Not used
2	RXD (receive data) input to the printer
3	TXD (transmit data) output from the printer
4	DTR (data terminal ready) output from the printer -- controls when the host may send data
5	Chassis ground
6	DSR (data set ready) input to the printer
7	RTS (request to send) output from the printer -- always in the ACTIVE condition when the printer is turned on
8	CTS (clear to send) - Not used by the printer
9	+5 V @ 0.75 A fused

The maximum current available through the serial and/or parallel port is not to exceed a total of 0.75 Amps.

When XON/XOFF handshaking is selected, data flow is controlled by the ASCII control codes DC1 (XON) and DC3 (XOFF). The DTR control lead will have no effect.

Interconnecting to DTE Devices — The printer is configured as data terminal equipment (DTE). To connect the printer to other DTE devices (such as the serial port of a personal computer), use an RS-232 null modem (crossover) cable. Figure 31 shows the required cable connections.

Interconnecting to DCE Devices — When the printer is connected via its RS-232 interface to data communication equipment (DCE) such as a modem, a STANDARD RS-232 (straight-through) interface cable must be used. Figure 32 shows the connections required for this cable.

Connecting to the KDU (Keyboard Display Unit) — The KDU was designed for DCE printer connections and requires a Zebra custom serial port gender changing adapter. The KDU now includes the KDU adapter and the Zebra kit part number for the KDU Adapter is 105934-088.

Connecting the Printer to a DTE Device

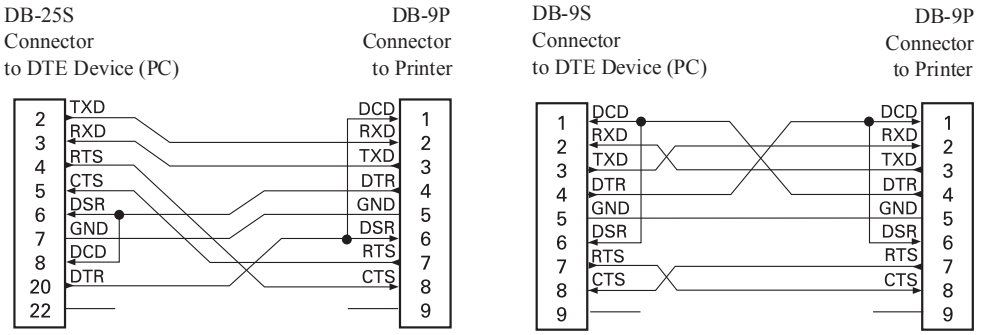

Connecting the Printer to a DCE Device